APPLIED MEASUREMENTS LTD.

Transducer Specialists...

appmeas.co.uk | info@appmeas.co.uk | +44 (0) 118 981 7339

Industrial draw-wire sensors for OEM

wireSENSOR K100

- *Quick and flexible modifications for OEM purposes*
- *Durable and robust sensor design (IP69K)*
- *Compact sensor with large measuring range*
- *Potentiometer, current or voltage output*

K100 model (measuring range 1500, 2500 mm)

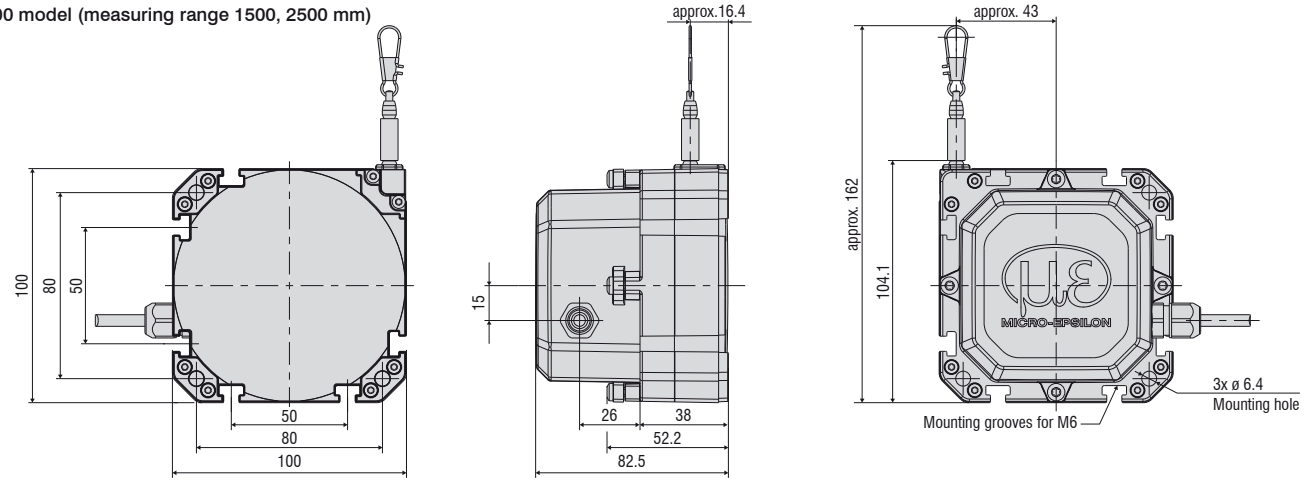

K100 model (measuring range 3500, 5000 mm)

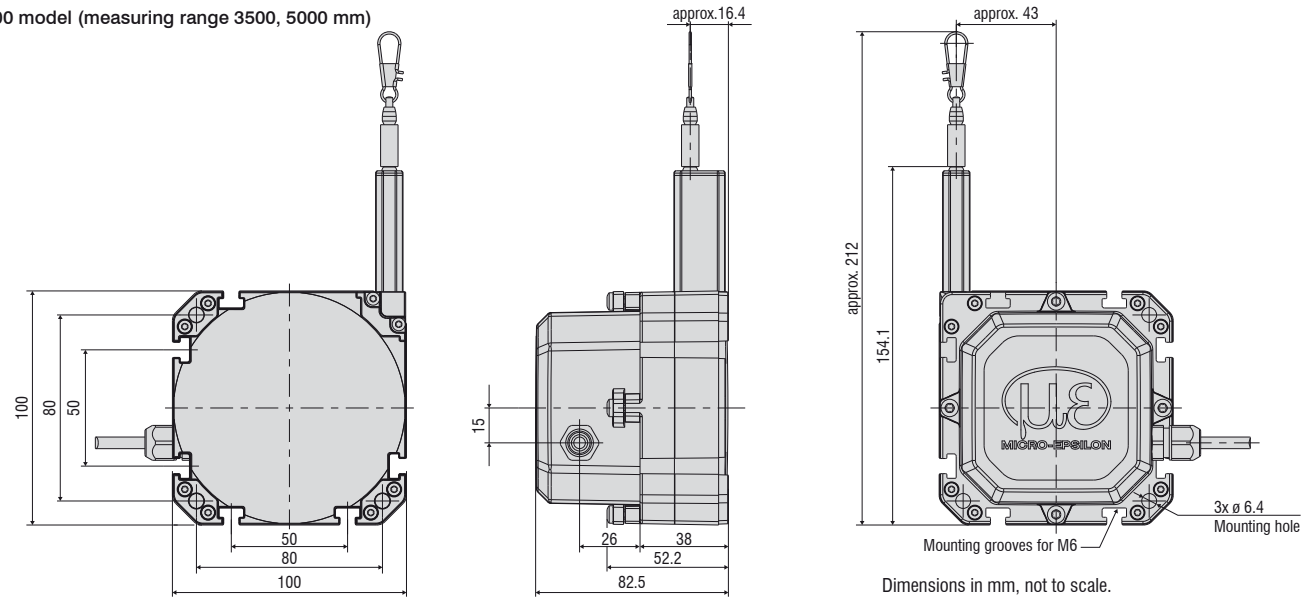

Dimensions in mm, not to scale.

Model		WPS-1500-K100	WPS-2500-K100	WPS-3500-K100	WPS-5000-K100
Measuring range		1500 mm	2500 mm	3500 mm	5000 mm
Analog output		Potentiometer, current, voltage			
Resolution		towards infinity			
Linearity	≤ ±0.25 % FSO	≤ ±3.75 mm	≤ ±6.25 mm	≤ ±8.75 mm	≤ ±12.5 mm
Sensor element		Hybrid potentiometer			
Wire extension force (max.)		approx. 10 N			
Wire retraction force (min.)		approx. 2 N			
Wire acceleration (max.)		approx. 5 g			
Material	Housing	Glass-fiber reinforced plastic			
	Measuring wire	Polyamide-coated stainless steel (ø 0.61 mm)			
Wire mounting		Wire clip			
Mounting		Through-bores ø 6.4 mm and mounting nuts (for M6) on the sensor housing			
Temperature range	Storage	-40 … +85 °C			
	Operation	-40 … +85 °C			
Connection		integrated cable, radial, length 1 m			
Shock (DIN EN 60068-2-27)		50 g / 8 ms in 3 axes, 2 directions and 1000 shocks each			
Vibration (DIN EN 60068-2-6)		5 g / 10 … 150 Hz in 3 axes and 20 cycles each			
Protection class (DIN EN 60529)		IP69K			
Weight		approx. 500 g			

FSO = Full Scale Output
Specifications for analog outputs from page 54 onwards.

Article designation

WPS -	1500 -	K100 -	CR -	P

- P: Output: P: potentiometer, U: voltage, I: current
- CR: Connection CR: integrated cable, radial, 1 m
- K100: K100 series
- 1500: Measuring range in mm

Wire deflection pulleys for external installation	
TR1-WDS	Wire deflection pulley, adjustable, for sensors with a wire diameter ≤ 0.45 mm
TR3-WDS	Wire deflection pulley, fixed, for sensors with a wire diameter ≤ 0.45 mm
TR4-WDS	Wire deflection pulley, fixed, for sensors with a wire diameter of 0.8 mm to 1 mm

TR1-WDS
Wire deflection pulley, adjustable, for sensors with a wire diameter ≤ 0.45 mm

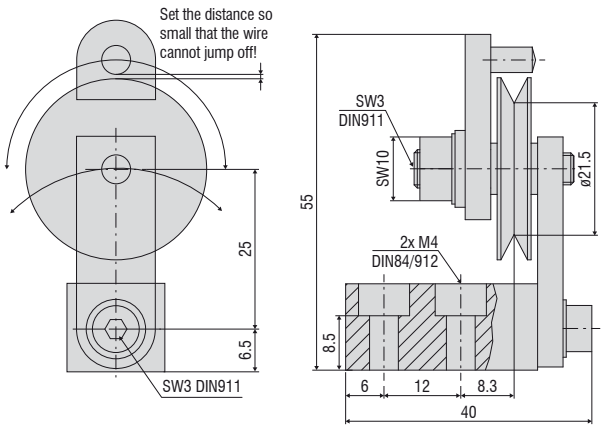

TR3-WDS
Wire deflection pulley, fixed, for sensors with a wire diameter ≤ 0.45 mm

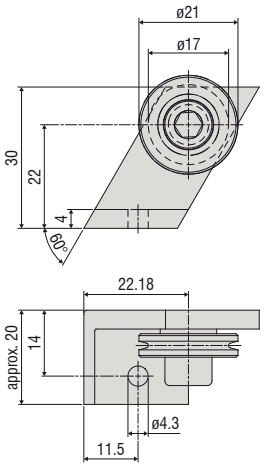

TR4-WDS
Wire deflection pulley, fixed, for sensors with a wire diameter of 0.8 mm to 1 mm

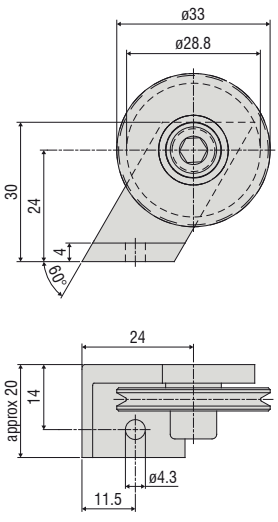

Dimensions in mm, not to scale.

Accessories	
WE-xxxx-M4	Wire extension with M4 wire connection, x=wire length
WE-xxxx-Clip	Wire extension with eyelet, x = wire length
WE-xxx-Clip-WSS	Wire extension with clip and uncoated wire d=0.45 mm
WE-xxxx-Ring-PW	Wire extension with plastic ring and para-aramid wire, 1 mm
GK1-WDS	Fork head for M4
MH1-WDS	Magnetic holder for wire attachment
MH2-WDS	Magnetic holder for sensor mounting
MT-60-WDS	Mounting clamps for WDS-P60
FC8	Mating plug for WDS straight, 8-pin
FC8/90	Mating plug, 90° angled for WDS
PC3/8-WDS	Sensor cable, 3 m long
PS2020	Power supply unit 24 V / 2.5 A; input 100-240 VAC, output 24 VDC / 2.5 A; mounting onto symmetrical standard rail 35 mm x 7.5 mm, DIN 50022)
WDS-MP60	Mounting plate for P60 models
PC2/10-WDS-A	Cable for SSI encoder, 2 m long
PC2/10-WDS-E	Cable for incremental encoder, 2 m long
PC10/10-WDS-A	Cable for SSI encoder, 10 m long
PC10/10-WDS-E	Cable for incremental encoder, 10 m long

Example application with accessories

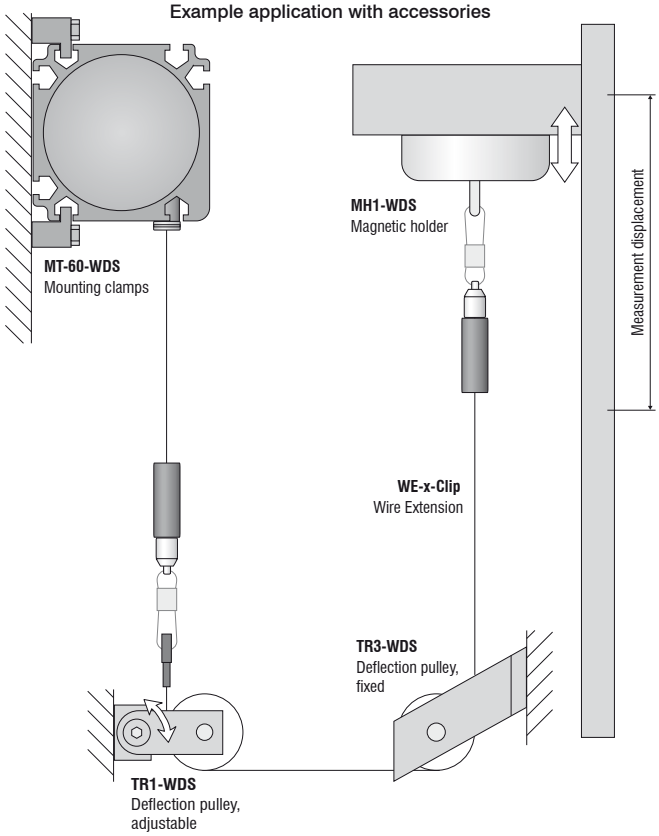

WDS-MP60
Mounting plate for P60 models

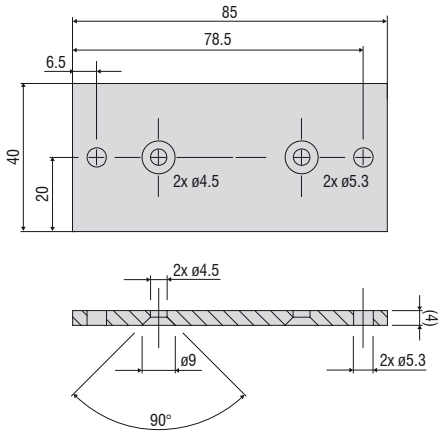

Installation instructions:
Wire attachment: during installation, do not allow at any time the measuring wire to freely return.
Angle of wire outlet: Make sure during installation that the wire outlet is straight (tolerance of ±3°). Exceeding this tolerance leads to increased wear of the wire material and on the wire outlet.

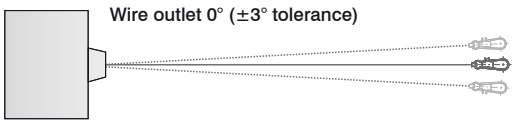

Dimensions in mm, not to scale.

WE-xxxx-M4
Wire extension with M4 wire connection, x=wire length

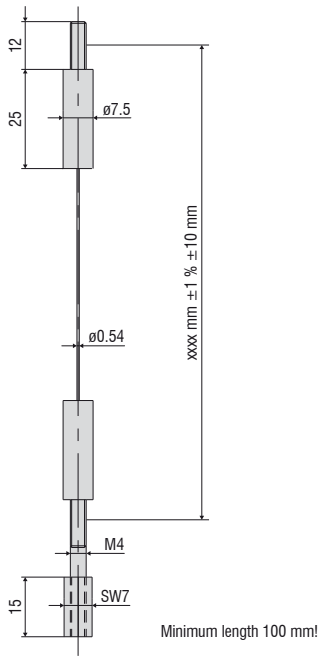

WE-xxxx-Clip
Wire extension with eyelet, x = wire length

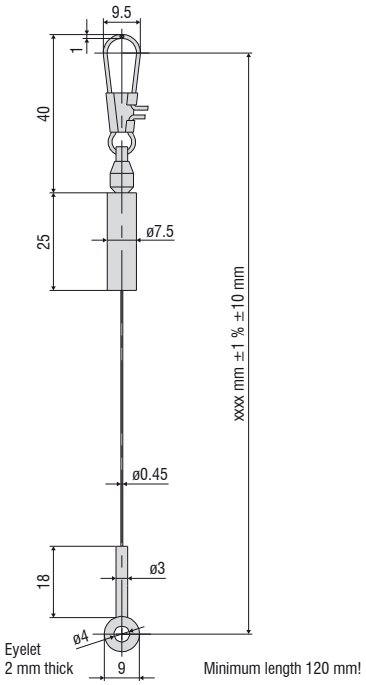

MH1-WDS
Magnetic holder for wire attachment

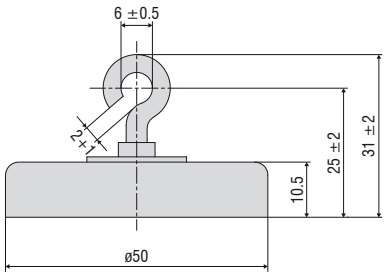

MH2-WDS
Magnetic holder for sensor mounting

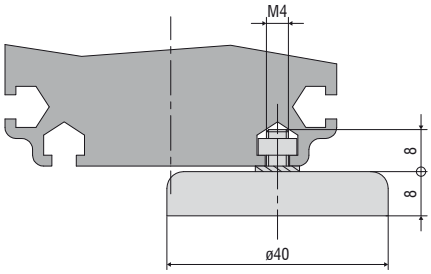

GK1-WDS
Fork head for M4

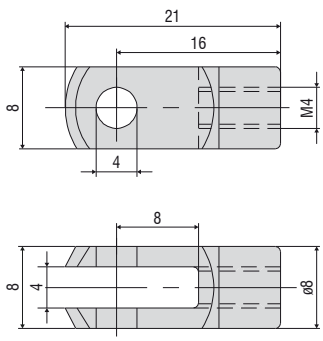

MT-60-WDS
Mounting clamps for WDS-P60

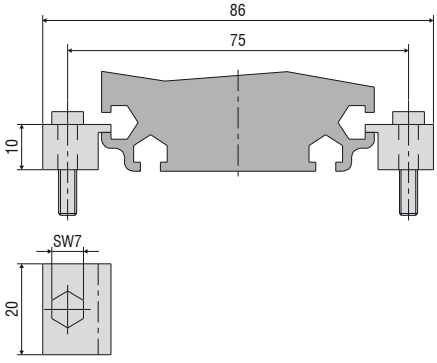

Output	Connector M16 -SA / -SR	Integrated cable -CA / -CR	Open contacts

Potentiometer output (P)	
Input voltage	max. 32 VDC with 1 kOhm / max. 1 W
Resistance	1 kOhm ±10 % (resistance divider)
Temperature coefficient	±0.0025 % FSO/°C

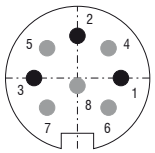

Sensor side

1 = Input +
2 = Ground
3 = Signal

White = Input +
Brown = Ground
Green = Signal

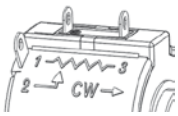

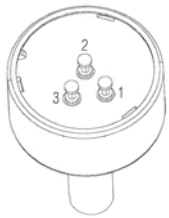

1 = Input +
2 = Signal
3 = Ground

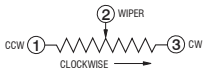

Voltage output (U)	
Supply voltage	14 ... 27 VDC (non-stabilized)
Current consumption	max. 30 mA
Output voltage	0 ... 10 VDC Option 0 ... 5 / ±5 V
Load resistance	>5 kOhm
Output noise	0.5 mV_{eff}
Temperature coefficient	±0.005 % FSO/°C
Electromagnetic compatibility (EMC)	EN 61000-6-4 EN 61000-6-2
Adjustment range (if supported by the model)	
Zero	±20 % FSO
Sensitivity	±20 %

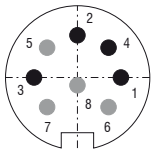

Sensor side

1 = Power supply
2 = Ground
3 = Signal
4 = Ground

White = Supply
Brown = Ground
Green = Signal
Yellow = Ground

Current output (I)	
Supply voltage	14 ... 27 VDC (non-stabilized)
Current consumption	max. 35 mA
Output current	4 ... 20 mA
Load	<600 Ohm
Output noise	<1.6 μA_{eff}
Temperature coefficient	±0.01 % FSO/°C
Electromagnetic compatibility (EMC)	EN 61000-6-4 EN 61000-6-2
Adjustment range (if supported by the model)	
Zero	±18 % FSO
Sensitivity	±15 %

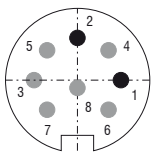

Sensor side

1 = Power supply
2 = Ground

White = Supply
Brown = Ground